Compact liNbO3 STM scanner/Zmotor for UHV applications and especially for cryo and millikelvin temperatures.

Based on research on single crystal LiNbO3 plates with inversion layer, we want to offer compact, rigid STM for use in UHV in temperature range 0K-1000K.

Due to properties of crystal such STM doesn't have creep or hysteresis.

Crystal provides linear displacement with electrical field up to 20 KV/mm.

Displacement coefficients at 4K within few percent are the same as at room temperature.

STM has stick-slip Z approach of tip buit into scanner .

Original concept of STM is taken from US Patent # 5866902 issued in year 1999.

We just used different material (LiNbO3 instead of piezo-ceramics and added Z stick slip motor for tip approach)

Short explanation of original scanner by author

Disk Scanner

This disk scanner needs some explanation. It uses a modified Unimorph disk. Unimorph disks are one of the most common piezoelectric devices available. They are most often used for small sound generators, speakers, buzzers. A Unimorph disk is made of two disks bonded together, one is a piezoelectric ceramic the other is metal. The metal disk makes it much less fragile than the ceramic alone.

Top view

Side view

The piezo ceramic expands or contacts when an electric field is applied to the disk. A standard Unimorph disk bows up or down as a voltage is applied between the metal disk and the silver electrode. The Unimorph disk used in this design moves about 0.16 µm/Volt, and its natural resonance frequency is approximately 2.5 kHz.

Bow Up

Flat

Bow down

I modified the standard Unimorph disk to get scanner motion in all three axis. My design divides the electrode into four quadrants, and I add a standoff at the center.

As the voltage on opposing electrodes are changed the angle at the center of the disk is changed. Because the voltage causes a change in angle the motion in the X-Y plain is directly proportional to the length of the standoff.

Scanner X,Y motion

Scanner Z motion

References

Patent

US5866902: Atomic force microscope with integrated optics

- As you can see scanner is based on bimorph membrane with 4 electrodes .
- Like in case of piezo-tube when applying the same voltage on all 4 electrodes membrane bends and tip moves in Z direction.
- When applying voltage of opposite sign to +X and –X electrodes membrane twists , tilting tip holder, this creates X motion of the end of the tip. Same for Y.
- Instead just having tube to hold tip as in original patent , we added frictional pair cylinder in cylinder with some side load. Inner cylinder(purple) is tip holder and can slide inside outer cylinder(orange) , which is attached to bimorph structure. By shaking structure along Z one can perform stick-slip steps of tip for approach to the sample.

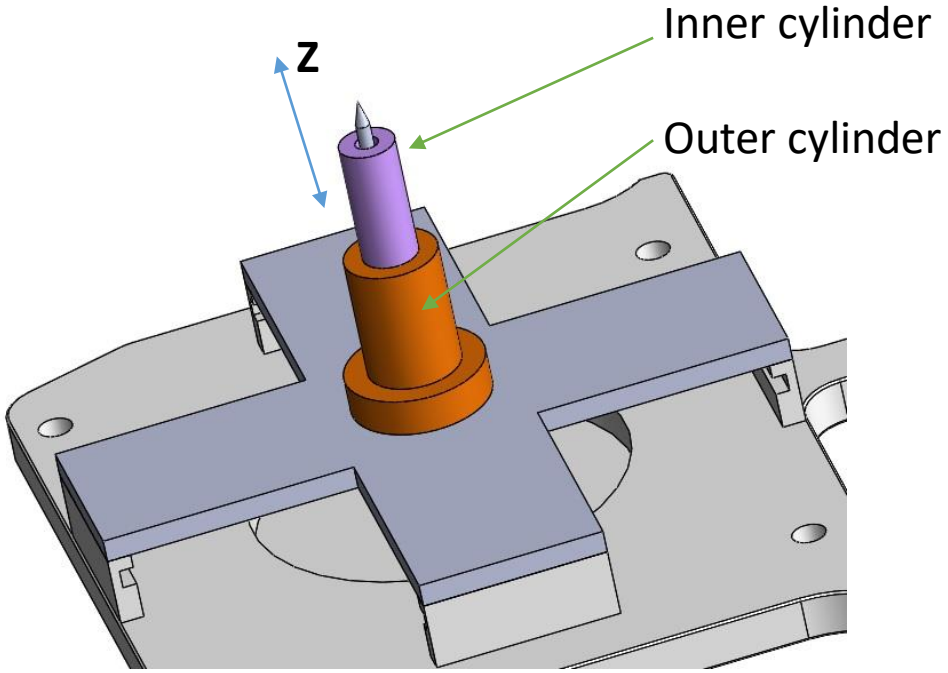

On picture below you can see general setup of design. Whole STM can be mounted on sample holder plate .

Similar plate is used to mount sample. Both plates could be inserted to rigid frame in such a way that tip is facing sample. After this tip can start approaching sample.

STM with protective shield

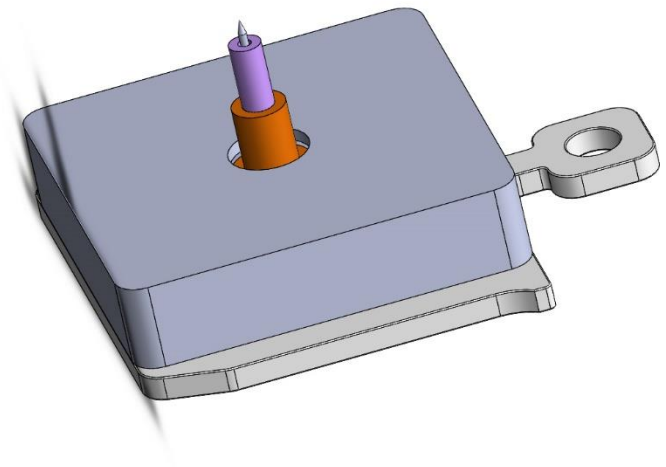

STM with tip extended forward

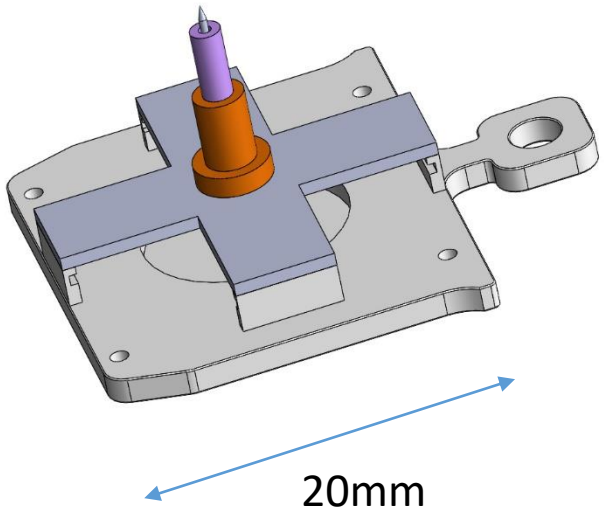

STM with tip completely retracted

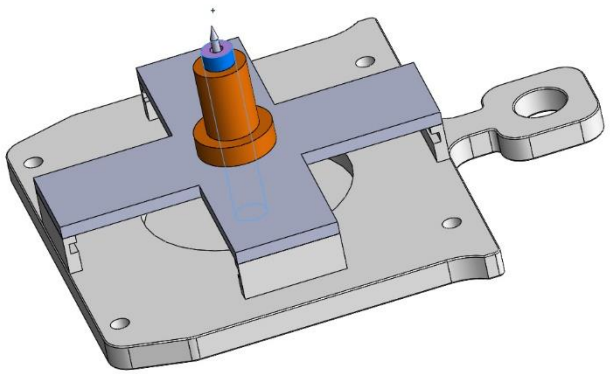

We performed FEA analysis of resonance frequencies and piezo effect driven displacement. Lowest **resonance frequency for shown version is around 7kHz** (+/-20% based on our experience). Below you can see pictures from piezo driven displacement simulation.

Scanner implementation shown gives X or Y displacement of 5 micrometers and around 3 micrometers in Z.
It is important to mention that **piezo displacement for LiNbO3 is the same for room temperature as for miliKelvin cryo temperature**. And **LiNbO3 doesn't have creep and hysteresis for electrical fields upto 20kV/mm.** Also **heat dissipation is more than 100 times less than for piezo-ceramics which is extremely important for cryo temperatures applications.**

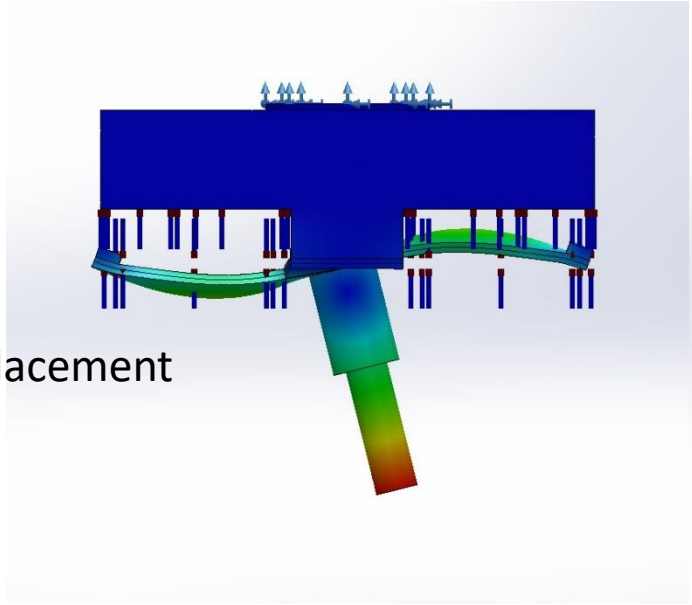

X or Y displacement

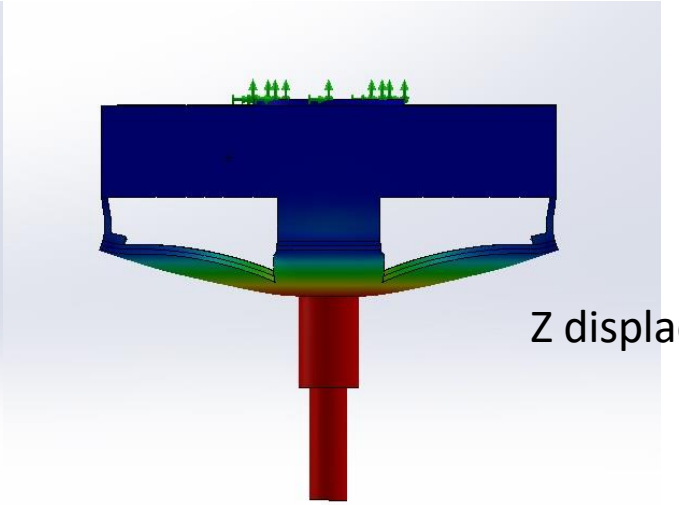

Z displacement

Advantages of proposed STM

- Not to have heavy tip exchange mechanism, STM tip could be mounted outside of vacuum chamber and then STM could be inserted into vacuum and baked at ,say, 700 Celsius, so just 10 min could be enough to have no outgassing

- STM can be used at any temperature in range 0K -1000K

- Due to low electro-mechanical dissipation(100 times less than piezo ceramics) STM will not generate that much heat at very low temperature when stepping or scanning

- One can have different size scanning window STMs for different applications

To make SPM even more functional , one should place it on X-Y orthogonal motion stage, to be able to navigate tip in X,Y,Z mutually orthogonal directions over few millimeters. Design of XY long range stage shown below is based on US patent # 8754571 .

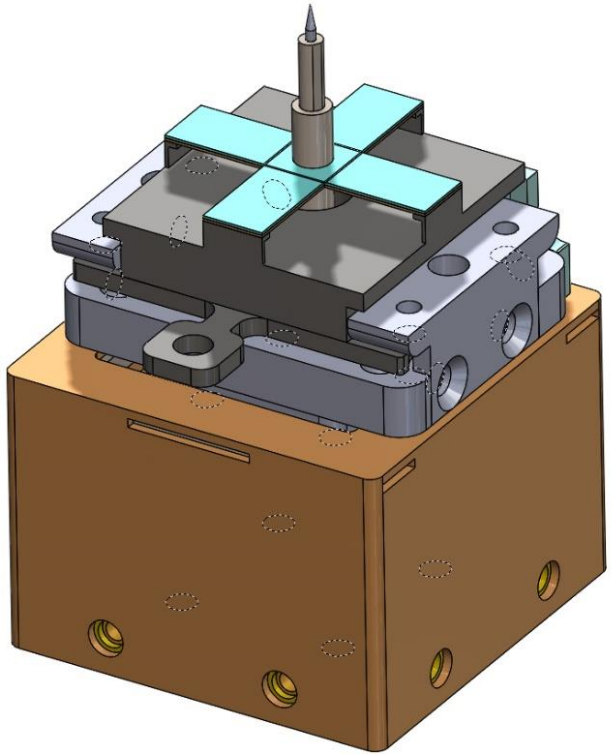

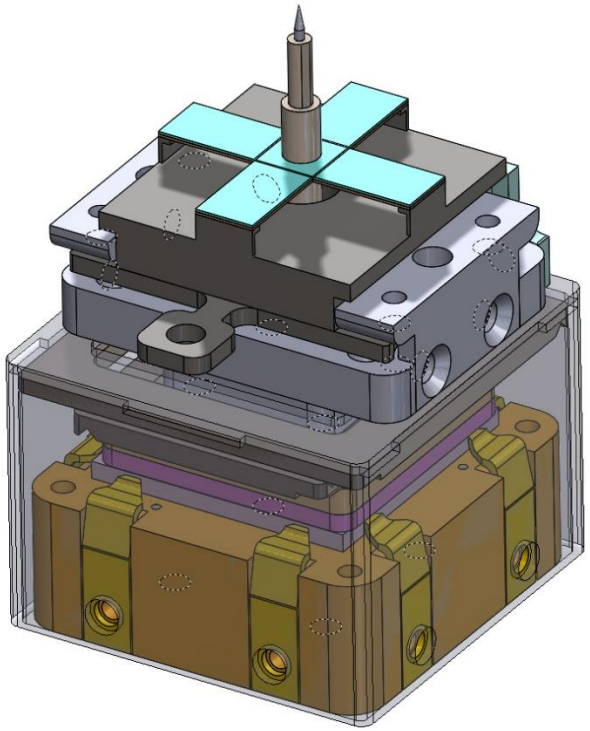

XY stage , mentioned above can be made also using LiNbO3 stacks. On picture one can see prototype odf LiNbO3 ctack made of 0.15mm thick plates with no use of glue by direct bonding. Thickness of electrodes is around 6um.

We are looking for partners/investors to develop designs mentioned above into commercial products.
Feel free to contact us at

spryadkin@gmail.com